VOR/DME SBJ	APP CRS	Rwy ldg	N/A
112.9	128°	TDZE	N/A
Chan 76		Apt Elev	86

VOR or GPS-A

MANVILLE/CENTRAL JERSEY REGIONAL (47N)

Use Newark Liberty Intl altimeter setting.	MISSED APPROACH: Climb to 800 then climbing right turn to 2000 direct SBJ VOR/DME and hold.
NEW YORK APP CON **132.8 379.9**	UNICOM **122.7** (CTAF)

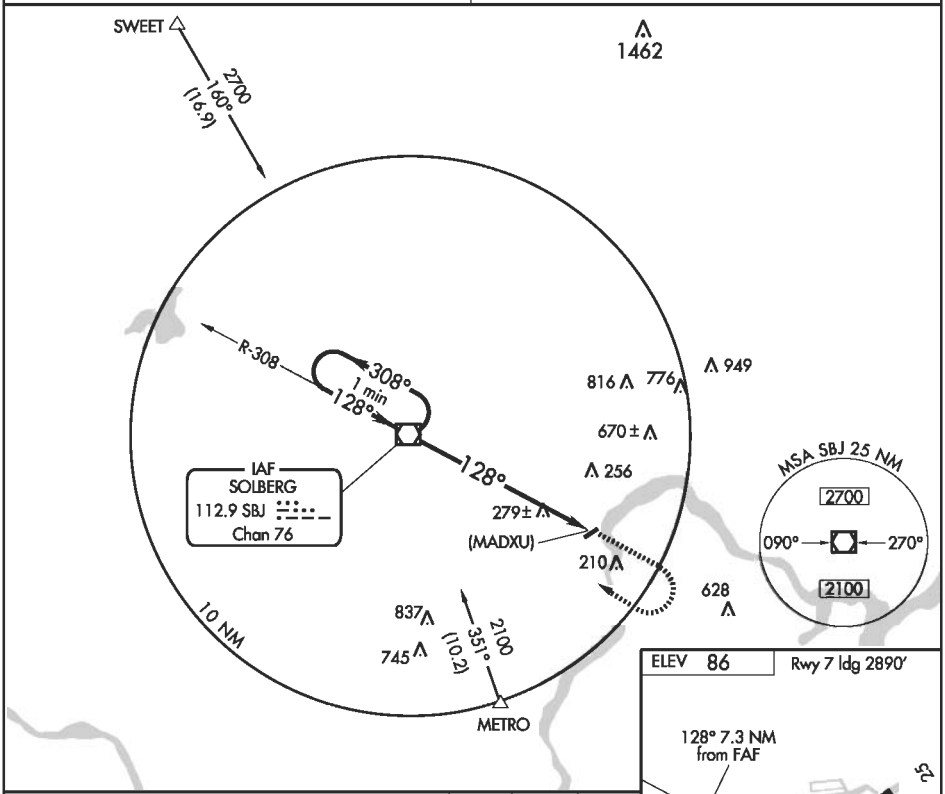

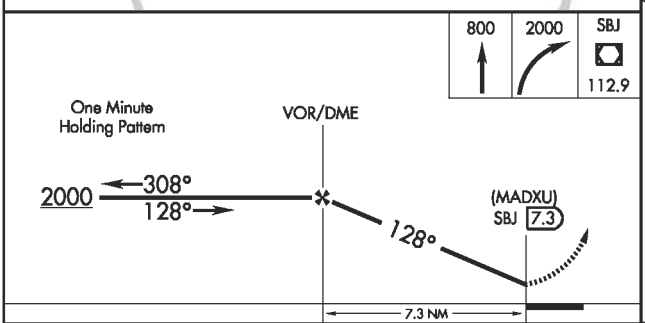

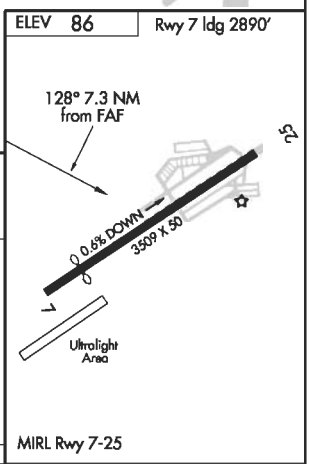

CATEGORY	A	B	C	D
CIRCLING	700-1	614 (700-1)	700-1¾ 614 (700-1¾)	NA

FAF to MAP 7.3 NM					
Knots	60	90	120	150	180
Min:Sec	7:18	4:52	3:39	2:55	2:26

NE-2, 01 SEP 2005 to 29 SEP 2005